Data Sheet

Article number: 2310419794
Description: E+G Side mounting top bracket
TLSB-42-A

Measures

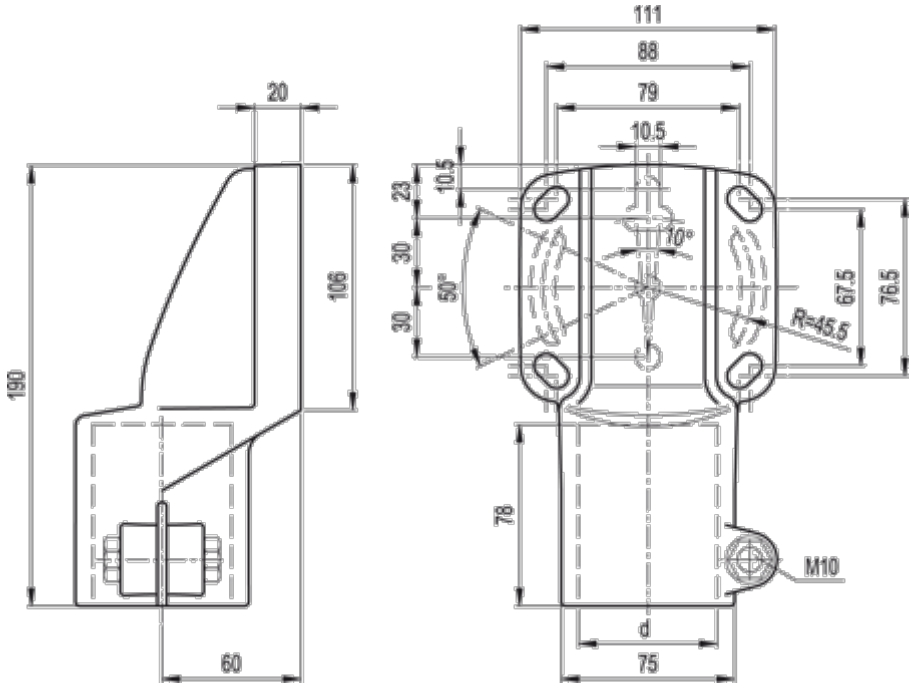

d (inch) = 1 1/4 GAS
d mm = 42,4
Weight (g) = 435

Product drawings and brochures of any kind may contain errors for which Brd. Klee A/S cannot be liable.